OL97 series LED shadowless surgical light
User Manual

Attention

Beijing AEONMED Co., Ltd. (hereafter Aeonmed for short) holds the copyrights to this non-public published manual, and reserves the rights to keep it as a secure document. Refer to this manual when operating, maintaining and repairing Aeonmed products only. Only Aeonmed may provide permission for the use of or copies of this document to others.

Proprietary materials protected by the copyright law are included in this manual. No section of it may be duplicated, copied, or translated into other languages without prior written approval from Aeonmed who reserves the copyright.

Everything written within this manual is considered to be correct, but it is not a substitute for the exercise of professional judgment. Aeonmed is not legally responsible for any mistakes printed within and/or any damages caused by incorrect installation and operation of equipment. Aeonmed does not supply privileges endowed by the patent law to any other names. Aeonmed is not legally responsible for the results caused by patent law breaking or any rights of the third party violating.

Before Using the Aeonmed products, every user has to read this manual carefully. This manual includes the steps which should be paid attention to, the operations which may cause exceptions and the hazards which may be harmful to people and machines. Aeonmed will neither assume the responsibilities of safety, reliability and performance nor provide free maintenance if every abnormal phenomena or the hazard harmful to people and machines, caused by the operations which should be avoided in this provision, happens.

Changes can be made to the contents contained in this manual without prior notice.

Manufacturer's Responsibility:

Aeonmed is responsible for the security, reliability and function of the equipment when the following conditions are adhered to:

- Installation, adjustments, fixes and repairs must be performed by individuals authorized by Aeonmed;
- Necessary electrical equipment and the working environment must be in accordance with national standards, professional standards and the requirements listed in this manual;
- This equipment must be used as instructed in these operating instructions.

⚠ **CAUTION: This equipment is not for personal or home use.**

⚠ **CAUTION: For safe and effective use of this equipment, maintenance according to Aeonmed specifications is necessary. Aeonmed is not responsible for injuries that result because of poor maintenance that is not in accordance with the procedures in this manual.**

Technical and Service Information will be supplied according to customer requirements by Aeonmed. Calibration methods and instructions will be supplied by Aeonmed at Aeonmed's discretion to allow the customer, under the assistance of qualified technicians, to repair the equipment where this can be done by the customer himself.

Warranty:

Manufacturing techniques and materials:

For a period of one year from the date of original delivery to the customer, the components and assemblies of this product are warranted to be free from defects caused by manufacturing techniques and materials, provided that the equipment is properly operated under conditions of normal use and that the equipment is regularly maintained per requirements specified by Aeonmed. The warranty period for

仅限于2017-ZHBJ-2056项目招投标使用

other parts is three months. Consumable parts are not included in this warranty. Aeonmed's obligation under the above warranty is limited to repairing the equipment free of charge.

Freedom from Obligations:

- Aeonmed's obligation under the above warranties does not include freight and other fees;
- Aeonmed is not responsible for any direct or indirect product damage or delays which result from: improper use; alteration by using the assemblies in an unapproved configuration; and maintenance by anyone other than Aeonmed or Aeonmed's appointed representatives;
- This warranty does not apply to the following situations:
  Improper use;
  Machines used without the proper maintenance or damaged;
  Aeonmed's original serial number label or mark is removed or replaced.

Security, reliability and operating condition:

Aeonmed is not responsible for the security, reliability and operating condition of this product in cases where:

- The assemblies are disassembled, modified and readjusted.
- The product is not operated correctly in accordance with these User manual instructions.
- The AC power used or the operating/storage environment does not follow the requirements in this manual.

Return

Follow these steps in case the product must be returned to Aeonmed:

1. Obtain the right of return (Return Material Authorization number)
   Contact Aeonmed Customer Service and inform us of the part number and type of the product. The part number is marked on the surface of the product. Return is not allowed if the number cannot be identified. Receive an RMA number from Aeonmed and mark it on the exterior of the product packaging. Enclose a statement of the product number, product type and also the reason for return.
2. Transportation charges
   Transportation and insurance charges must be prepaid by the user for transporting the product to Aeonmed for repair (including the custom fee and other fees for machines of non-mainland China).

NOTE:

Each Aeonmed product has a serial number, such as OL97 xx/xx xx xx xxx. This serial number should be referenced in all correspondence.

Where:
OL97 xx /xx = machine model number
xx xx xxx: equipment number

- 1st two 'xx' digits – last two digits of current year
- 2nd two 'xx' digits indicate month product was manufactured
  - Z=O,Y=1,X=2,W=3,V=4,U=5,T=6,S=7,R=8,K=9.
- 3rd group of 'xxx' digits indicates the number unit shipping in a current month.

仅限于2017-ZHBJ-2056项目招投标使用

Using Guidance

Thank you for choosing this Aeonmed product.

In order to use the product correctly and effectively, please read these operating instructions carefully and completely before using the product for the first time.

When using the product, please proceed in accordance with the information provided in these operating instructions on the basis of fully understanding the information in this manual.

This product is only for intended use as described in these operating instructions.

Only specially trained service professionals are authorized to carry out maintenance and functional checks on this product.

Please contact Aeonmed for guidance in the case of questions regarding any applications of this product. Aeonmed will do its best to offer users effective assistance.

The specifications of this product are subject to change without prior notice.

Manufacturer：	**Beijing AEONMED Co.,Ltd.**
Registered address：	**The No.2 building, 11B in Science City, Fengtai District, Beijing (Park)**
Address of manufacturing site：	**The No.2 building, 11B in Science City, Fengtai District, Beijing (Park)** **The No.4 building, No.135, Guowei Road, Yangpu District, Shanghai** **No. 10, Chaobai Street, Yanjiao Development Zone, Sanhe Dsitrict, Hebei**
Name of after-sales service ：	**Beijing AEONMED Co.,Ltd.**
Address of after-sales service：	**The No.2 building, 11B in Science City, Fengtai District, Beijing (Park)**
Postal code：	**100070**
Tel：	**010-83681616**
Fax：	**010-63718989**
Hotline：	**800-810-8333**
Website：	**http://www.aeonmed.com/**

European Representative：	**Shanghai International Holding Corp. GmbH (Europe)**
Address：	**Eiffestrasse 80, 20537 Hamburg Germany**

仅限于2017-ZHBJ-2056项目招投标使用

Contents

1 Foreword ..... 1—1

1.1 OL97 Series LED Shadowless Surgical Light Introduction ..... 1—1
1.1.1 Intended Use ..... 1—2
1.1.2 Contraindication ..... 1—2
1.2 Symbols in This Operating Instructions and on the Equipment ..... 1—2

2 OL97 Series LED Shadowless Surgical light Architecture ..... 2—1

2.1 System Architecture ..... 2—1
2.2 System Architecture Diagram ..... 2—1

3 Introduction to the LED Shadowless Surgical Light ..... 3—1

3.1 Revolving System ..... 3—1
3.1.1 Parts of Revolving System ..... 3—1
3.1.2 Description of the Parts ..... 3—1
3.2 Spring Arm ..... 3—1
3.3 Lighthead Assembly ..... 3—1
3.3.1 Lighthead ..... 3—1
3.3.2 Touch Screen ..... 3—1
3.3.3 Induction Control ..... 3—4
3.3.4 Shading Compensation Control ..... 3—4
3.3.5 Colour Temperature Control ..... 3—4
3.3.6 SD /HD Camera ..... 3—4
3.3.7 Camera Control Panel ..... 3—5
3.3.8 Handle for camera attachment ..... 3—5
3.3.9 The Disinfection handle ..... 3—5

4 Guidance for Installation and Adjustment ..... 4—1

4.1 Guidance for Installation ..... 4—1
4.1.1 Basic Requirements ..... 4—1
4.1.2 Installation of the fixed plate ..... 4—2
4.1.3 Installation of the revolving arm ..... 4—2
4.1.4 Installation of the spring arm ..... 4—3
4.1.5 Installation of the lighthead ..... 4—3
4.1.6 Installation of the housing ..... 4—4
4.2 Guidance for Adjustment ..... 4—5
4.2.1 Connecting to Mains/AC Power ..... 4—6
4.2.2 Adjustment for Damping of the Revolving Arm ..... 4—6

5 Operational Guidance ..... 5—1

5.1 Positioning of the LED Shadowless Surgical Light ..... 5—1
5.2 Operation of the Lighthead ..... 5—1
5.2.1 Adjustment of the Lighthead Position ..... 5—1
5.2.2 Switching and Illumination Adjustment ..... 5—1

6 Safety ..... 6—0

仅限于2017-ZHBJ-2056项目招投标使用

7 Maintenance and Trouble Shooting ..... 7—1
7.1 Maintenance and Care ..... 7—1
7.2 Repair Policy ..... 7—1
7.3 Maintenance Outline and Schedule ..... 7—1
7.3.1 User Maintenance ..... 7—2
7.3.2 Maintenance Period ..... 7—2
7.4 Replacing Fuses ..... 7—2
7.5 Maintenance during Application and transport ..... 7—4
7.6 Disinfection and Cleaning ..... 7—4
7.7 Trouble Shooting ..... 7—5
8 Specifications and Working Theory ..... 8—1
8.1 Specifications ..... 8—1
8.1.1 OL97 series LED Shadowless Surgical light Specification Table ..... 8—1
8.1.2 Environment Requirements ..... 8—1
8.1.3 Technical Specifications of OL97 series LED Shadowless Surgical light ..... 8—2
8.1.4 Technical Specification for Video Camera for OL9700 ..... 8—3
8.1.5 Technical Specification for Video Monitor for OL9700 ..... 8—5
8.1.6 OL97 series LED Shadowless Surgical light Packing List ..... 8—5
8.2 Working Theory ..... 8—13
8.2.1 Functional Block Diagram of OL97 series LED Shadowless Surgical light ..... 8—13
8.2.2 Design Principles of the LED Shadowless Surgical Light ..... 8—13
8.2.3 Technical Characteristics of the LED Shadowless Surgical Light ..... 8—14
9 Electromagnetic Compatibility ..... 9—1
9.1 Electromagnetic Compatibility ..... 9—1
9.1.1 Guidance and Manufacture's Declaration – Electromagnetic Emission ..... 9—1
9.1.2 Recommended Separation Distances ..... 9—5

仅限于2017-ZHBJ-2056项目招标文件使用
仅限于2017-ZHBJ-2056项目招标文件使用
仅限于2017-ZHBJ-2056项目招标文件使用

仅限于2017-ZHBJ-2056项目招投标使用
仅限于2017-ZHBJ-2056项目招投标使用
仅限于2017-ZHBJ-2056项目招投标使用

1 Foreword

1.1 OL97 Series LED Shadowless Surgical Light Introduction

The OL97 series LED Shadowless Surgical light is a ceiling-type Shadowless Surgical light suitable for surgery illumination at hospitals and surgery centers. The OL97 series LED Shadowless Surgical light is designed to limit the possible shadows during surgery. The product consists of three parts: the revolving subsystem; the balance subsystem and the lighthead subsystem. There are five rotating sectors in the OL97 series LED Shadowless Surgical light which are: the revolving arm rotating around light base; the spring arm rotating around the revolving arm; the balance elbow rotating around the spring arm; the lighthead elbow rotating around balance elbow; and the lighthead rotating around the lighthead elbow.

The OL97 series LED Shadowless Surgical light includes eighteen models: OL9760、OL9760SD、OL9760HD、OL9760/60、OL9760/60SD、OL9760/60SD/HD、OL9760/60HD、OL9780、OL9780SD、OL9780HD、OL9780/60、OL9780/60SD、OL9780/60SD/HD、OL9780/60HD、OL9780/80、OL9780/80SD and OL9780/80SD/HD、OL9780/80HD. These models are distinguished by the lighthead diameter , combinations and the camera system(80: 800mm diameter; 60: 600mm diameter; / : OL97XX/XX is a dual lighthead system, while OL97XX is a single lighthead one.SD：standerd definition, HD：high definition) OL9780/60 SD/HD LED Shadowless Surgical light is used as the typical model in the following contents.

NOTE: Throughout this manual, the OL 97 series LED Shadowless Surgical light may also be referred to as a Surgical Light or Surgical Luminaire. The OL97 series LED Shadowless Surgical light is minor surgical luminaire. These references are all considered synonymous for purposes of this manual.

⚠ **WARNING: OL97 series LED Shadowless Surgical light is not suitable for use in a magnetic resonance imaging (MRI) environment.**

⚠ **WARNING: The user of the OL97 series must be a medical professional and must be trained.**

⚠ **WARNING: Electromagnetic interference or emissions from High-frequency surgical equipment, cardiac defibrillators and cardiac defibrillator-monitors located in close proximity to the OR Table Device may affect the equipment performance. Please Refer to Section 9 for more specific details regarding emission types and equipment sensitivity.**

⚠ **WARNING: The OL97 series is not intended for use in areas with risk of explosion. Do not operate the compressor in the presence of flammable anesthetics or injury or equipment damage could result.**

⚠ **WARNING: To avoid the risk of electric shock, this equipment must only be connected to supply mains with protective earth.**

⚠ **WARNING: Refer to the manufacturer’s instructions for high-frequency surgical equipment, cardiac defibrillators and cardiac defibrillator-monitors.**

仅限于2017-ZHBJ-2056项目技术使用

1.1.1 Intended Use

The OL97 series LED Shadowless Surgical light can be used to provide effective illumination for various types of surgical procedures performed in hospitals.

1.1.2 Contraindication

There are no known contraindications for this product.

1.2 Symbols in This Operating Instructions and on the Equipment

⚠ **WARNING and** ⚠ **CAUTION indicate possible dangers in case of violation of the stipulations in this manual. Refer to these operating instructions regularly and follow them closely.**

⚠ **WARNING: indicates potential hazards to operators or patients.**

⚠ **CAUTION: indicates potential damage to equipment.**

Instead of illustrations, other symbols may also be utilized. Not all of them may necessarily appear in the equipment and manual. The symbols include:

~	Alternating current		Production date
	Protective ground		Manufacturing address
	Label in routing body :refer to User Manual for specific guidance. Label in the back of HD display: we only use the specified socket in OL9700 shadowless surgical light. The connection on the product of the equipment must comply with the requirements	**SN**	Serial number

仅限于2017-ZHBJ-2056项目招投标使用

of IEC60950 and IEC 60601-1.

Label in the back of SD display: we only use the specified socket in OL9700 shadowless surgical light.

The connection on the product of the equipment must comply with the requirements of IEC60950 and IEC60601-1.

Warning & Caution，refer to the manual with the equipment as well as standard IEC60601-1

The CE Mark

The European Representative Mark

THIS WAY UP: Indicates correct upright position of the transport package

FRAGILE:Contents of the transport package are fragile therefore it shall be handled with care.

KEEP AWAY FROM RAIN: Transport package shall be kept away from rain.

DO NOT ROLL: Transport package shall not be rolled.

STACKING LIMIT BY NUMBER: Maximum number of identical packages which may be stacked on one another where "2" is the

TEMPERATURE LIMITS: Indicates temperature limits within which the transport package shall be stored and handled.

仅限于2017-ZHBJ-2056项目招投标使用
仅限于2017-ZHBJ-2056项目招投标使用
仅限于2017-ZHBJ-2056项目招投标使用

limiting number

KEEP AWAY FROM SUNLIGHT: Transport package shall not be exposed to sunlight.

PROCTECT FROM RADIOACTIVE SOURCES: Contents of the package may deteriorate or may be rendered totally unusable by penetrating radiation.

HUMIDITY LIMITS: Indicates humidity limits within which the transport package shall be stored and handled.

ATMOSPHERIC PRESSURE LIMITS: Indicates atmospheric pressure limits within which the transport package shall be stored and handled.

仅限于2017-ZHBJ-2056项目招投标使用
仅限于2017-ZHBJ-2056项目招投标使用
仅限于2017-ZHBJ-2056项目招投标使用

2 OL97 Series LED Shadowless Surgical light Architecture

2.1 System Architecture

OL97 Series LED Shadowless Surgical light are composed of a light base, revolving arms, spring arms, lightheads (80: 800mm diameter; 60: 600mm diameter) and camera system (SD：standard definition, HD：high definition.).

2.2 System Architecture Diagram

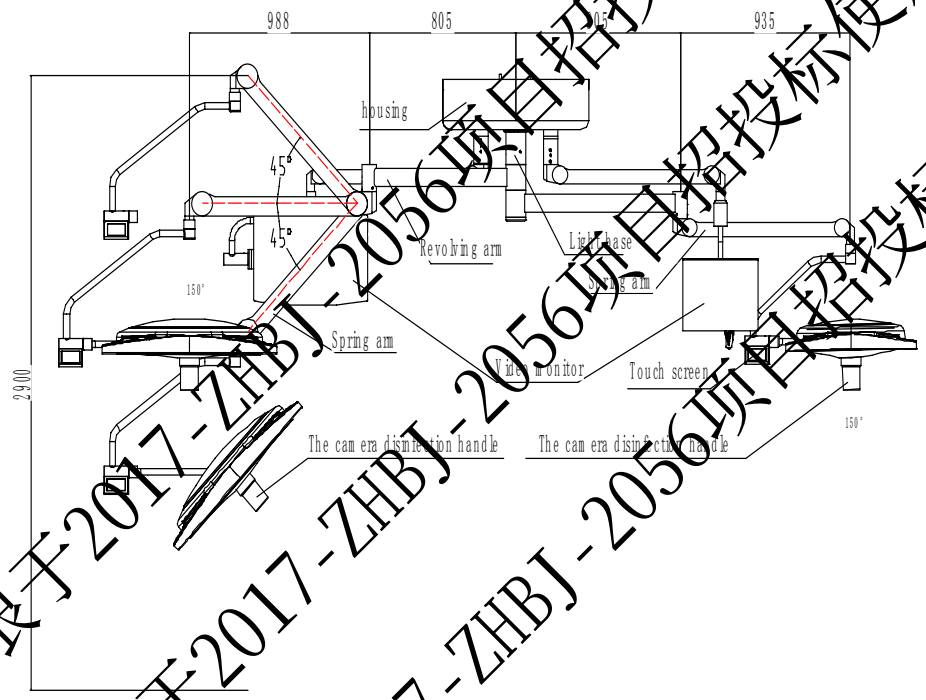

Figure 2-1 System Architecture for OL97 series LED Shadowless Surgical light

仅限于2017-ZHBJ-2056项目招投标使用
仅限于2017-ZHBJ-2056项目招投标使用
仅限于2017-ZHBJ-2056项目招投标使用

仅限于2017-ZHBJ-2056项目招投标使用
仅限于2017-ZHBJ-2056项目招投标使用
仅限于2017-ZHBJ-2056项目招投标使用

3 Introduction to the LED Shadowless Surgical Light

3.1 Revolving System

3.1.1 Parts of Revolving System

The revolving system of the OL97 series LED Shadowless Surgical light consists of the following parts: the light base and the revolving arm assembly. (Refer to Figure 2-1).

3.1.2 Description of the Parts

The functions of the light base of the LED Shadowless Surgical light are to contain the power supply; to interface to electrical elements such as fuses and wire connecting posts; to mount and secure the Light Assembly to the ceiling.

The Revolving Arm assembly of the LED Shadowless Surgical light is connected both to the Light Base and to the Spring Arm assembly. The Revolving Arm is light and flexible, and articulates easily for adjusting and expanding the working area.

3.2 Spring Arm

The Spring Arm is used to balance and stabilize the lightheads and to enable the light heads to stay at any required positions. By moving the Spring Arm, the user can expand the working area of the light heads in either vertical or horizontal directions.

3.3 Lighthead Assembly

3.3.1 Lighthead

The lighthead provides illumination for the surgery. The user can adjust illumination via a control panel installed on the lighthead. The disinfection handle located on the lighthead offers a sterile area for the user interface when moving the lighthead.

3.3.2 Touch Screen

Touch screen, with a 4.3 inch TFT screen (Resolution: 480*272), has made the overall performance of OL97 series LED Shadowless Surgical light leapfrog improvement. Connected to the microcontroller by the high-speed 8-bit bus, it supports 256 colors and has characteristics of low-power dissipation, lightweight design, wide-range temperature and free adjustment in luminance

Its interface adopts bus-paralleled method which can be connected to the microcontroller bus on the controlling circuit board; with the command mode, it only needs 2 address signal lines. It is shown in Figure 3-1.

仅用于2017-ZHBJ-2056项目招投标使用

仅限于2017-ZHBJ-2056项目招投标使用
仅限于2017-ZHBJ-2056项目招投标使用
仅限于2017-ZHBJ-2056项目招投标使用

Figure3-1 Control Panel

Description of Interfaces

	Lighthead adjustment interface	As the TAB mode: When the icon is highlighted (light blue), lighthead adjustment mode is ON and the lighthead can be adjusted in the illuminance and faculae. When the icon is darkened (dark blue), lighthead adjustment mode is OFF.

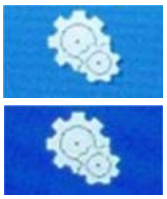	Function settings interface	As the TAB mode: When the icon is highlighted (light blue), function settings mode is ON and the background light, induction, shading compensation and button buzzer can be adjusted to ON and OFF When the icon is darkened (dark blue), function settings mode is OFF.

Description of indication buttons

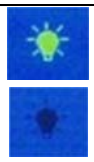	Indicator	The illumination intensity indicator light is affected by illumination adjustment buttons. As intensity is increased, the LED bar will illuminate the next position. As intensity is decreased, the LED Bar will extinguish LEDs.
	Luminance modulated indicator	When the function button on the touch screen is on, the enhancement and diminished button controlling the indicator light can adjust the brightness of light.
	Faculae adjustment indicator	When the function button on the touch screen is on, the increase and decrease button controlling the indicator light can adjust the size of faculae.
	Background light indicator	When the indicator light is in the option of ON, the background light is activated. When the indicator light is in the option of OFF, the background light is not activated.
	Induction indicator	When the indicator light is in the option of ON, the induction function is activated. When the indicator light is in the option of OFF, the induction function is not activated.
	Shading compensation indicator	When the indicator light is in the option of ON, the shading compensation function is activated. When the indicator light is in the option of OFF, the shading compensation function is not activated.
	Button buzzer indicator	When the indicator light is in the option of ON, the button buzzer function is activated. When the indicator light is in the option of OFF, the button buzzer function is not activated.
	Color temperature indicator	Indicates the symbol on the right side gear color temperature, color temperature display gear indicating the operation shadowless lamp color temperature adjusting gear (totally 9 levels).
	Luminance modulated indicator strip	When the function buttons are in the option of ON and the light luminance is adjusted, the indicator strip will be changed as well according to the adjustment (totally 10 levels).
	Faculae adjustment indicator strip	When the function buttons are in the option of ON and the light faculae is adjusted, the indicator strip will be changed as well according to the adjustment.

Description of function buttons

仅限于2017-ZHBJ-2056项目招投标使用
仅限于2017-ZHBJ-2056项目招投标使用
仅限于2017-ZHBJ-2056项目招投标使用

	Function button ON/OFF	When the function button is the “sunken” status, the light adjustment form the function is ON. Only when the function button is ON, can all the adjustment work.
	Luminance enhancement	Press the button and the surgical light will be lightened gradually to the maximum. Luminance modulated indicator strip will also be the maximum.
	Luminance diminution	Press the button and the surgical light will be darkened gradually to the minimum. Luminance modulated indicator strip will also be the minimum.

	Faculae adjustment	When the function button On/OFF is valid, press the two buttons and the size of faculae can be adjusted as required.
	Function ON	Choose to active the function buttons.
	Function OFF	Choose to close the function buttons.

3.3.3 Induction Control

Above the handle, there is the induction control of OL97 series LED Shadowless Surgical light. The 4 infrared sensors on the induction area can be used separately to control the luminance and faculae. On the induction area, there is a display area which can reflect the adjustment synchronize to the touch screen. The induction control is OFF in the boot state and it need to be activated in the function settings interface, which is shown in Fig.3-1.

3.3.4 Shading Compensation Control

On the lighthead, there is the shading compensation control of OL97 series LED Shadowless Surgical light. The 4 infrared sensors on the lighthead detect whether some areas are blocked; then the light sources from other areas will be strengthened to maintain the original luminance. The shading compensation control is OFF in the boot state and it need to be activated in the function settings interface, which is shown in Fig.3-1.

3.3.5 Colour Temperature Control

OL97 series LED Shadowless Surgical light color temperature function in the lamp holder part.Color temperature from low to high is divided into nine gear, to function within the mode Settings interface to adjust the color temperature, as shown in figure 3-1.

3.3.6 SD /HD Camera

The Operating Room Lamp is configurable for use with a camera and video monitor to serve as a visual aid in surgical procedures. The Camera and Monitor are used for capturing and displaying video image information gathered from the operating field region of interest.

Depending on the camera model installed, the video output signal will be either SD or /HD

仅用于2017-ZHBJ-2056项目招投标使用

video signal. A compatible Monitor is used together with the camera to display the captured image.

3.3.7 Camera Control Panel

A keypad Camera Control Panel is provided to apply power to the camera and monitor components and provides adjustment buttons for Camera ZOOM and FOCUS functions. The Camera Control Panel is shown in Figure 3-2.

Figure 3-2 Camera Control Panel

Description of Function Buttons & Status Indicator

	Zoom In button	Push this button to enlarge the camera image.
	Zoom Out button	Push this button to reduce the size of the camera image.
	Focus Near button	Push this button to adjust the focus of camera near.
	Focus Far button	Push this button to adjust the focus of camera far.

3.3.8 Handle for camera attachment

The attachment handle is used to fasten the camera in the lamp.

3.3.9 The Disinfection handle

The disinfection handle of this LED Shadowless Surgical light is detachable from the lighthead and is used for steering the movement of lighthead. The handle can be removed from the lighthead for disinfection and/or sterilization after use.

⚠ **WARNING: Make sure that the handle is securely locked after every attachment, to avoid**

仅限于2017-ZHBJ-2056项目招投标使用
仅限于2017-ZHBJ-2056项目招投标使用
仅限于2017-ZHBJ-2056项目招投标使用

the possibility that the handle could drop down and lead to patient injury during surgery.

仅限于2017-ZHBJ-2056项目招投标使用
仅限于2017-ZHBJ-2056项目招投标使用
仅限于2017-ZHBJ-2056项目招投标使用

4 Guidance for Installation and Adjustment

4.1 Guidance for Installation

⚠ **WARNING:** **This product is classified as permanently installed equipment. This product must be installed by Aeonmed Trained and authorized personnel only. Refer to the Product Service Manual for complete installation instructions.**

⚠ **WARNING:** **This product is classified as permanently installed equipment. A two position double pole switch for AC Mains power must be installed on the wall. The switch as installed must meet the requirements of standard IEC 61059-1 which defines allowed electrical clearances and creep distances. The switch should be mounted either vertically or horizontally and marked on it or beside it appropriately – such as "0"/"1" or "ON"/"OFF".**

4.1.1 Basic Requirements

- According to the institutional characteristics of the operating room, users can carry out the foundation construction
- The foundation must be able to withstand 500kg and the safety factor of the suspension system support should be not less than 8.
- The light height adjustment lever should be installed when the height of operating room is greater than 300cm and the safety factor of the light height adjustment lever suspension system support should be not less than 8 to avoid the light shaking.

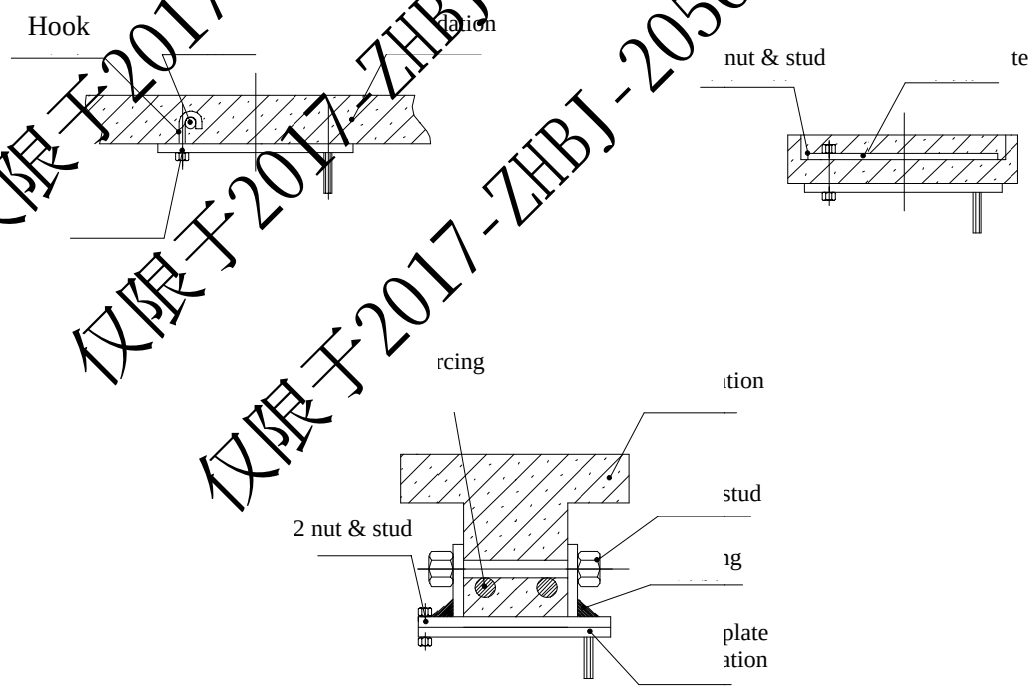

Figure 4.1 OL97 series LED Shadowless Surgical light foundation installation diagram

仅限于2017-ZHBJ-2056项目招投标使用

4.1.2 Installation of the fixed plate

- The mounting plate allotted by Aeonmed must be securely installed firstly. (Figure 4-2)
- The mounting plate is fixed in the light base using twelve M12 nuts. The verticality between the base axis and the horizontal plane to ensure the shadowless light runs well, and then tighten twelve M12nuts.

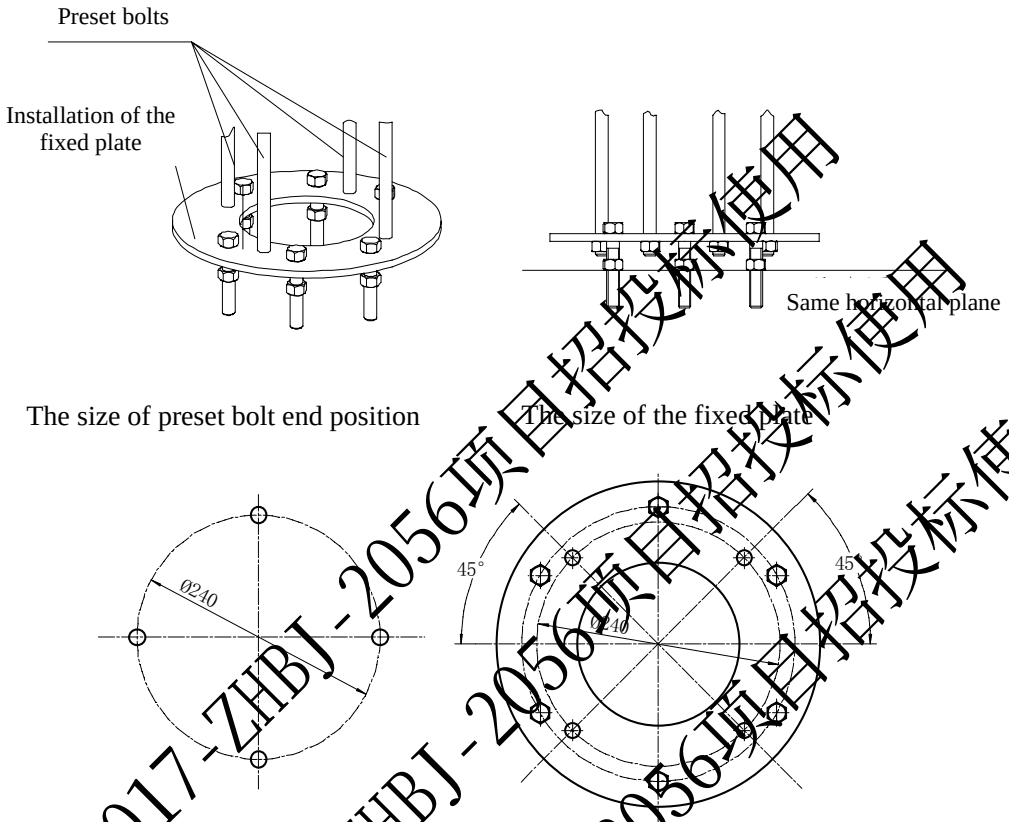

Figure 4-2 OL97 series LED Shadowless Surgical light fixed plate installation diagram

4.1.3 Installation of the revolving arm

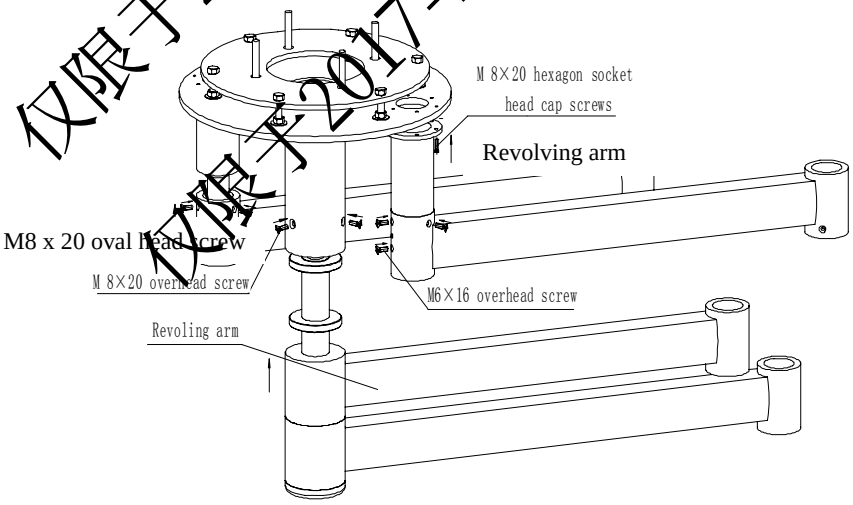

Figure 4-3 OL97 series LED Shadowless Surgical light revolving arm installation diagram

仅限于2017-ZHBJ-2056项目招投标使用

- Insert the revolving arm spindle and the connector on the light base tightly, then extend the spindle into the light base and tighten six M8 x 20 screws.

⚠ **CAUTION: The consistency of the connector wire color must be paid attention to during installation.**

4.1.4 Installation of the spring arm

- Remove the electrical fixed cover equipped with the rotary male connector and loosen the damping nails on the revolving arms.
- Insert the spring arms and the revolving arm connectors into the revolving arms directly, load the adjustment washers (optional) and fix then spring arm ports into the revolving arms by the retaining ring. Rotate the spring arms and adjust the damping nails to detect the flexibility of the connections.
- Adjust the position of electrical fixed covers equipped with the rotary male connectors and then put into the spring arm ports of the revolving arms.

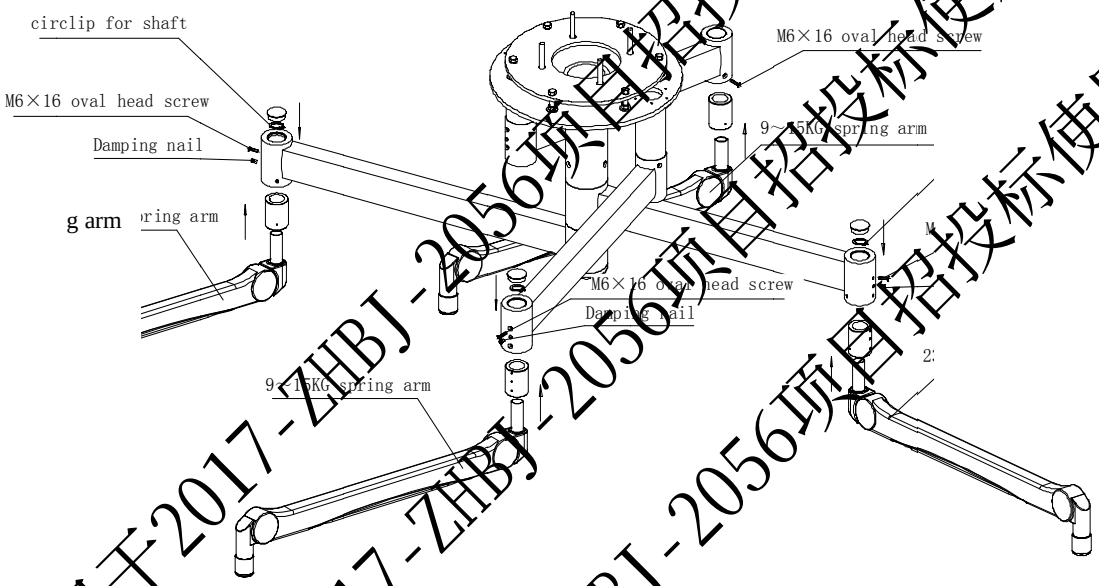

Figure 4-4 OL97 series LED Shadowless Surgical light spring arm installation diagram

4.1.5 Installation of the lighthead

- Remove the screws and serrated washers using Phillips screwdriver and slide the sleeve up to remove the limit plate. (Figure 4-5)
- Insert the spring arm elbows into the spring arms, insert the limit plate and put down the sleeve, and then tighten the screws and serrated washers.
- Remove the limit blocks under the spring arms using flat-blade screwdriver so that the lights can be moved up and down. (Figure 4-5)
- After finishing the installation, the professional staff need affix the special seal and fill in the installation ID with water pen.

⚠ **WARNING: The limit block of the spring arm should be installed before the removal to avoid upturning; otherwise, it may cause injury.**

⚠ **CAUTION: The seal cannot be removed by users.**

仅限于2017-ZHBJ-2056项目招投标使用

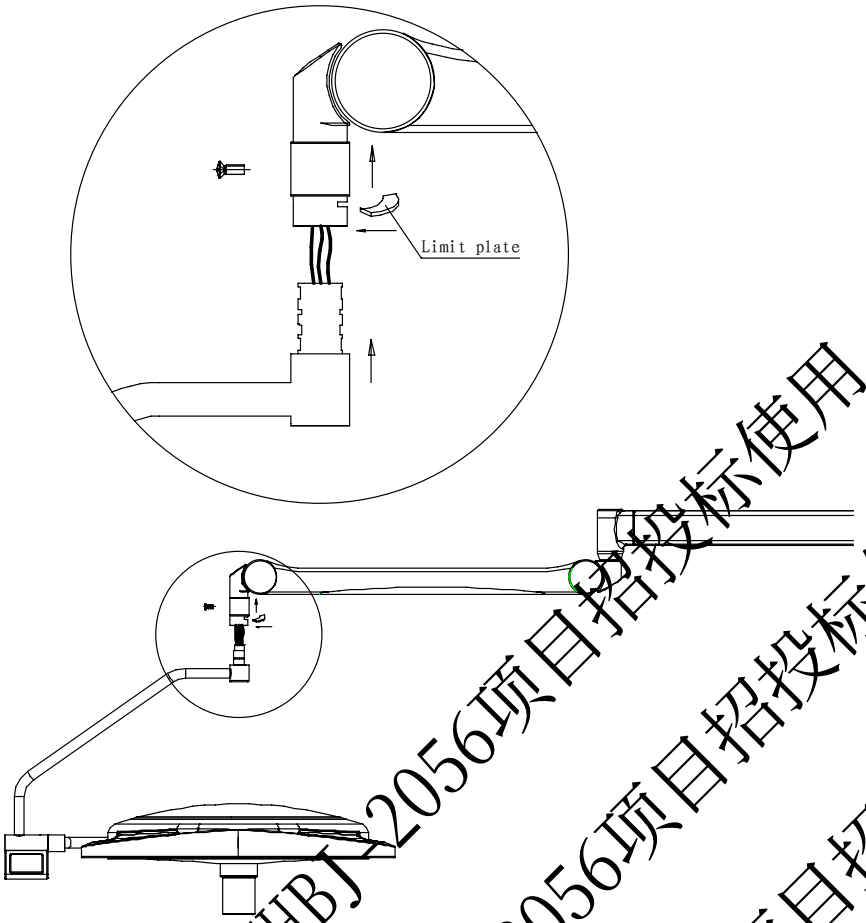

Figure 4-5 OL97 series LED Shadowless Surgical light lightheads installation diagram

4.1.6 Installation of the housing

Connect the two parts of housing on the clamp ring with the self-tapping screws, embed the ornament into the upper edge and loosen the clamp ring by internal hexagonal wrench, then push it to the roof with the housing. Finally, clamp the ring with internal hexagonal wrench.

仅限于2017-ZHBJ-2056项目招投标使用
仅限于2017-ZHBJ-2056项目招投标使用
仅限于2017-ZHBJ-2056项目招投标使用

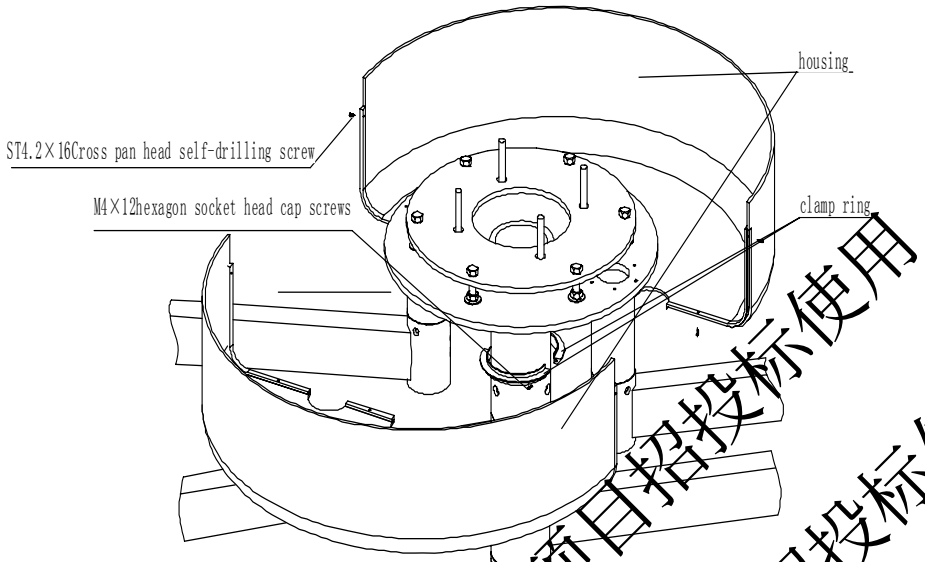

Figure 4-6 OL97 series LED Shadowless Surgical light housing installation diagram

4.2 Guidance for Adjustment

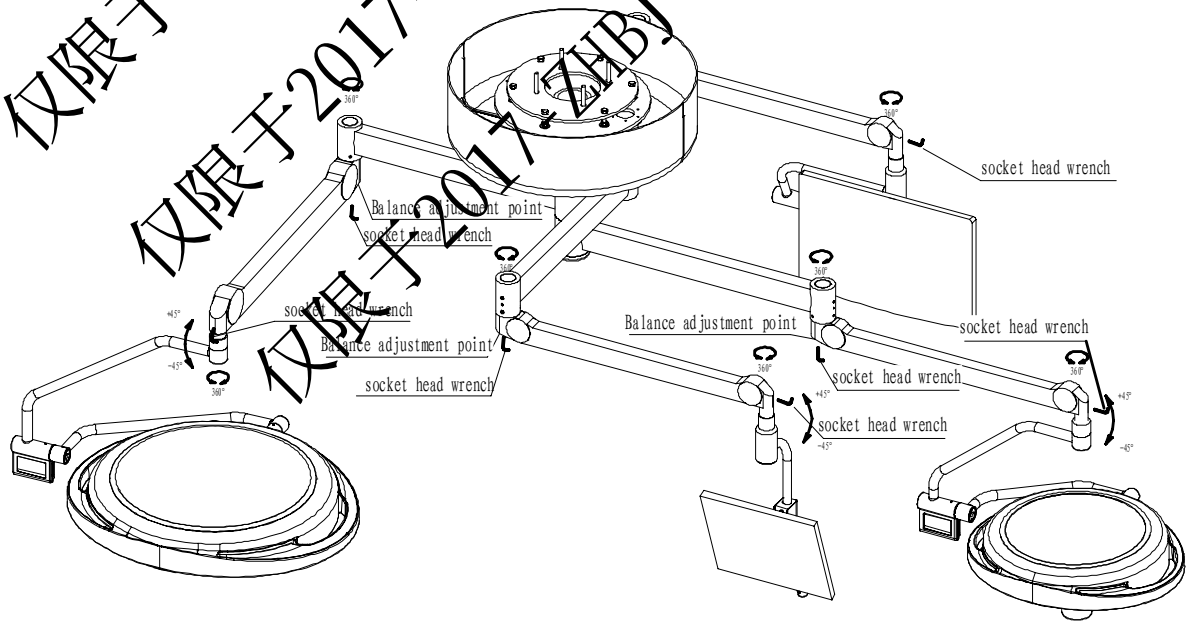

Figure 4-7 Sketches for the adjustment of OL97 series LED Shadowless Surgical light

仅限于2017-ZHBJ-2056项目招投标使用
仅限于2017-ZHBJ-2056项目招投标使用
仅限于2017-ZHBJ-2056项目招投标使用

4.2.1 Connecting to Mains/AC Power

- Insert the socket head wrench into the regulating port at the front end of spring arm, turn clockwise and loosen it. This will enable the lighthead to be moved up and down (Figure 4-7).
- In the case that the spring arm is too tight to move or if the spring arm is dropping down when the lighthead is placed in the top-most position, insert the socket wrench into the regulation port at the low rear end, turn clockwise or counter-clockwise to set balance force. Note that this adjustment is properly preset before delivery.

4.2.2 Adjustment for Damping of the Revolving Arm

There is rotational damping in the principal axis of the revolving arm. The strength of the damping directly affects the location of the lighthead. If the lighthead does not stay at the desired place or if it feels stiff to move, use a screw driver to regulate the damping by turning the rotation damping screw clockwise or counter-clockwise (Figure 4-7).

仅限于2017-ZHBJ-2056项目招投标使用
仅限于2017-ZHBJ-2056项目招投标使用
仅限于2017-ZHBJ-2056项目招投标使用

5 Operational Guidance

5.1 Positioning of the LED Shadowless Surgical Light

The light Base, the revolving arm and the spring arm are designed to rotate freely at any angle. Gripping the disinfection handle of the satellite lighthead, the lighthead can be manipulated and positioned up and down and rotated. Similarly, by gripping the handle of the main lighthead, it is also possible to rotate the main lighthead to a desired position. (Refer to Figure 2-1)

5.2 Operation of the Lighthead

5.2.1 Adjustment of the Lighthead Position

When connected to the AC mains power after the lighthead is installed, the lighthead will light automatically after a time delay. Pull at the balance elbow and the lighthead elbow to move the lighthead up and down, or to rotate it around the central axis. Use the disinfection handle of the satellite lighthead to move this lighthead up and down or left and right. Use the handle of main lighthead to position that lighthead up and down or left and right. (Figure 2-1)

5.2.2 Switching and Illumination Adjustment

Switching “on” the lighthead is done via a wall switch. When the lighthead is switched on, it lights after a time delay. Depending on the user needs, push the Illumination Intensity increase button and Illumination Intensity decrease button or use the induction control to adjust for the desired level of illumination. The Illumination Intensity Indicator will display the intensity setting of the light in a bar graph pattern to indicate current light intensity set point. This product has the additional function of a background light.

Section 3 of this manual provides more detailed description of the Control Panel Status Indicator and Control Button Functions.

仅限于2017-ZHBJ-2056项目招投标使用
仅限于2017-ZHBJ-2056项目招投标使用
仅限于2017-ZHBJ-2056项目招投标使用

6 Safety

- The pedestal for the LED Shadowless Surgical light must be able to bear a weight of at least 300Kg vertical loading and 500kg-mtorsional loading to avoid possible accidents and injuries to user or patient.
- Periodically verify the all components of the Surgical Light are properly and firmly secured, to avoid any loose connections which may cause accidents or injuries to user or patient.
- When installing the LED Shadowless Surgical light and making wire connections, be sure that each output wire matches the input wire in color, and assure no mistakes are made. All wiring must be performed in accordance with local Electrical Codes. The installation must be done by an Aeonmed Trained professional.
- After completing the surgery, be sure to remove the AC mains power by turning off the two-way switch which is usually installed on a nearby wall.
- The operators or users can observe the filter from the light panel to the interior. It must be replaced immediately when the crack, gap or other damage appears, otherwise it will cause tissue damage.
- Repair of the LED Shadowless Surgical light, except for the maintenance mentioned in the Section 7 “Maintenance and Care”, must be carried out by Aeonmed Trained personnel. Aeonmed is not responsible for any consequences or injuries resulting from repairs conducted by unauthorized personnel.
- OL97 series LED Shadowless Surgical light carries a warranty of 1 year, such guarantee starting from the date the product is received at the end user location. To receive this warranty, the end-user must complete and return to Aeonmed the warranty return receipt within 60 days, together with the a copy of the invoice. This is the policy Aeonmed follows to offer this warranty, as well as available repair service.
- When properly maintained, serviced, and used within advertised operating environments, the expected service life of OL97 series LED Shadowless Surgical light is ten years. Please replace the LED Shadowless Surgical lights after ten years to ensure the safe usage of the product.
- Aeonmed reserves the right to make any modifications on this product with prior notice. If there is need for further technical information, contact Aeonmed Service for assistance.
- It is suggested that the hospital should furnish an emergency power source to the light as backup in case of power interruption.

仅限于2017-ZHBJ-2056项目技术标使用
仅限于2017-ZHBJ-2056项目技术标使用
仅限于2017-ZHBJ-2056项目技术标使用

7 Maintenance and Trouble Shooting

7.1 Maintenance and Care

⚠ **WARNING:** **Movable components and detachable parts can cause injury. Use caution when system components and parts are being moved or replaced.**

⚠ **WARNING:** **Disposal of waste or invalidated apparatus (for example LEDs, electrical components) must be in accordance with the relevant policies of the local government.**

⚠ **WARNING:** **Replacement of LEDs can only be done after the LED Shadowless Surgical light has cooled down. Do not touch the LEDs with your finger.**

7.2 Repair Policy

Do not use malfunctioning equipment. Make all necessary repairs, or have the equipment serviced by an authorized Aeonmed Service Representative. After repair, test the equipment to ensure that it is functioning properly, in accordance with the manufacturer's published specifications.

To ensure full reliability, have all repairs and service done by an authorized Aeonmed Representative. If this is not possible, replacement and maintenance of parts as described in this manual should be performed by a competent, trained individual with experience in Medical Systems repair, and access to appropriate testing and calibration equipment.

⚠ **CAUTION:** **No repair should ever be undertaken or attempted by anyone without proper qualifications and equipment. All service personnel must be certified by Aeonmed Service Department prior to performing equipment repairs or maintenance tasks.**

It is recommended that the damaged parts should be replaced with components manufactured and sold by Aeonmed. After any repair work, test the unit to ensure it complies with the manufacturer's published specifications.

Please contact the nearest Aeonmed Service Center for service assistance. In all cases, other than where Aeonmed's warranty is applicable, repairs will be made at Aeonmed's current list price for the replacement part(s) plus a reasonable labor charge.

7.3 Maintenance Outline and Schedule

The following schedule is a recommended minimum standard based upon normal usage of 500 times per year and environmental conditions. Frequency of maintenance for the equipment should be higher if your actual usage is more than the minimum standard.

仅限于2017-ZHBJ-2056项目招投标使用

7.3.1 User Maintenance

Minimum maintenance Interval	Planned maintenance Operations
Every use	Clean the outer surface.
Every three month	Check all the mechanical articulating parts and do adjustment if require, for instance, the fixing screws and adjusting the damping of them.
When cleaning and installing	Check if any components are broken, and replace or repair them as necessary.
As required	Replace fuses if any are found to have blown.

7.3.2 Maintenance Period

⚠ **CAUTION: The following maintenance schedule for equipment and accessories is recommended based upon normal working conditions.**

The complete unit	The recommended maintenance interval for the LED Shadowless Surgical light is 3 years
Components or parts	A thorough test and replacement of parts should be carried out every 5 years

7.4 Replacing Fuses

⚠ **WARNING: Disconnect the LED Shadowless Surgical light from mains/AC supply before replacing fuses, otherwise injury may result.**

⚠ **WARNING: Replace fuses with only those of the specified type and current rating, otherwise damage to the equipment could result.**

⚠ **CAUTION: Each fuse is fragile, so replacement should be done carefully. Do not use excessive force.**

Steps for replacing the fuses are as follows:

1) Switch off the AC mains supply;
2) Remove the decorative clighting ring under the housing of the light base;
3) Remove the four screws connecting the housing and the fuse holder together with fuse;
4) Remove the fuse from the fuse holder;
5) Install a new fuse with rating and Model Number noted below;
6) Replace the fuse holder into its original position;
7) Remount the housing and decorative clighting ring;
8) Reconnect the Light to the AC mains.

仅限于2017-ZHBJ-2056项目招投标使用

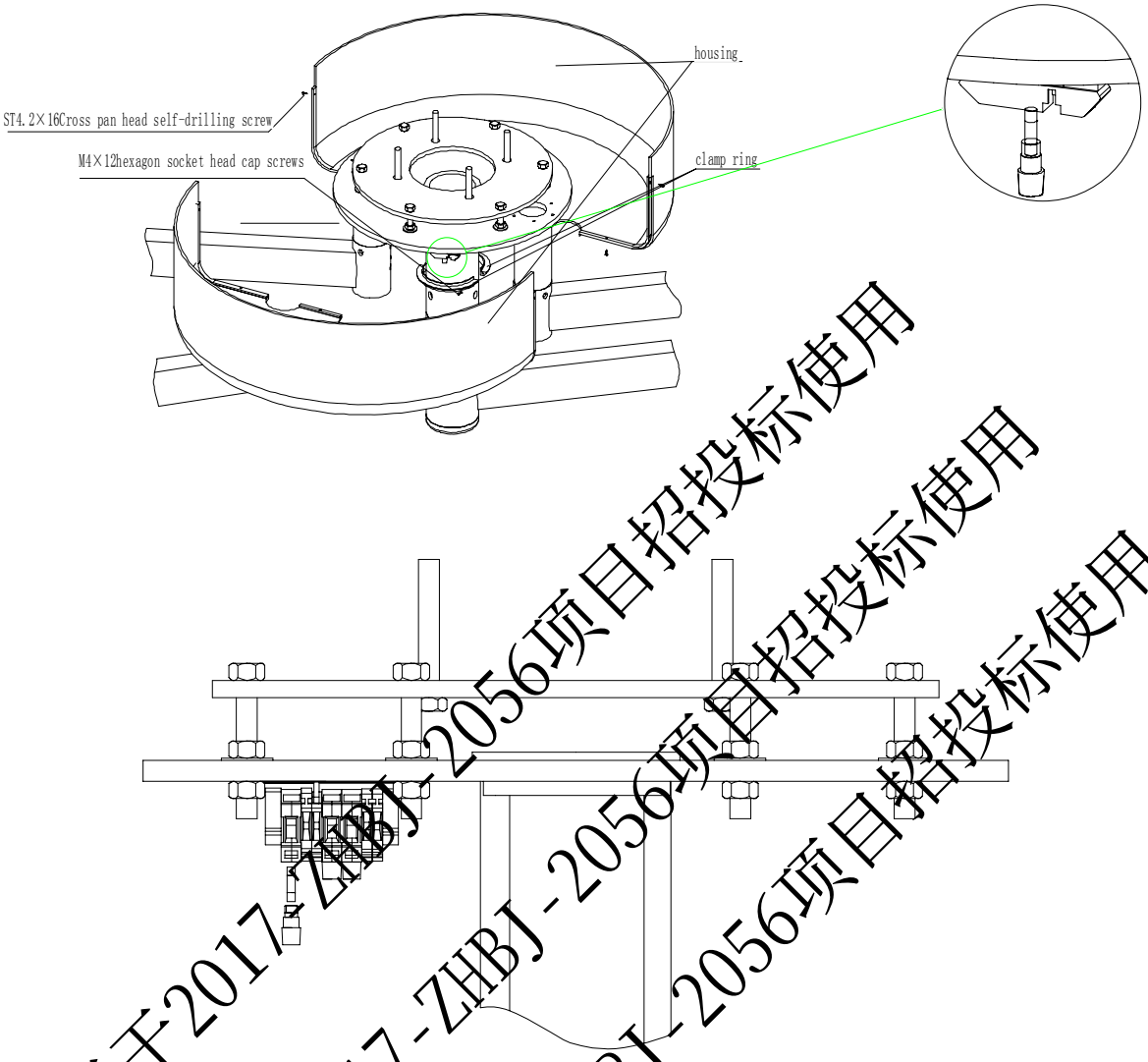

Figure 7-1 replacing fuse of OL97 series LED Shadowless Surgical light

仅限于2017-ZHBJ-2056项目招投标使用
仅限于2017-ZHBJ-2056项目招投标使用
仅限于2017-ZHBJ-2056项目招投标使用

7.5 Maintenance during Application and transport

⚠ **WARNING:**

- **When transporting the LED Shadowless Surgical light, do not move it with the head plate or leg plate attached, as this may break the head plate or leg plate.**
- **When transporting the operating room light, the stopper for the spring arm must only be removed after the lighthead has been permanently mounted after installation. This will prevent the spring arm from springing upward and causing injury.**
- **The packaged LED Shadowless Surgical light may be shipped by highway, air or railway, but must avoid environments of impact, severe vibration, temperatures, and condensing humidity / moisture.**

7.6 Disinfection and Cleaning

⚠ **WARNING:**

Comply with your hospital's applicable regulations regarding safety and risk management.

- **Refer to the material safety data guidelines of each cleaning agent.**
- **Refer to the operating and maintaining manual of all the disinfecting equipment used.**
- **Switch off the power supply before operation.**
- **Wear safety gloves and safety goggles.**
- **Users should comply with the national regulations related to sanitation and disinfection.**

⚠ **CAUTION: To prevent damage:**

- **Refer to the data supplied by the manufacturer if there are any questions about the cleaning agent.**
- **Never use any organic, halogenated or petroleum based solvents, anesthetic agents, glass detergents, acetone or other irritant cleaning agents.**
- **Never use any abrasive materials to clean any of the components (i.e. Steel wool, silver polish).**
- **Keep liquids as far from the electrical components as possible.**
- **Prevent liquid from entering the equipment.**
- **The PH value of cleaning solutions used must be between 7.0 and 10.5.**

⚠ **CAUTION: Check if there is damage to the components of the LED surgical light. Replace if necessary.**

When cleaning any part of the LED Shadowless Surgical light, do not use hard brushes or tools which could cause damage to the surface of equipment.

- **Before surgery, the disinfection handle must be removed and disinfected per hospital**

仅限于2017-ZHBJ-2056项目招投标使用

policies (or in a solution of 75% alcohol). The lighthead must be cleaned per hospital policies (or with a soft cloth soaked with a solution of 75% alcohol).

- **The glass panel of the lighthead must be disinfected per hospital policy (or with a solution of 75% alcohol).**
- **The LED Shadowless Surgical light shall be cleaned and disinfected both before and after the surgery, by using a non-corrosive disinfectant.**
- **The complete LED Shadowless Surgical light can be sterilized under ultraviolet ray illumination.**

7.7 Trouble Shooting

Guidance for Problem Analysis and Solutions

Symptom	Possible Cause	Recommended Action
OL97 series LED Shadowless Surgical light are not able to be switched on.	Switch not turned on or the fuses are burnt out.	Turn on the switch or replace the fuses using the procedure defined in Section 7.4.
Lighthead cannot be positioned steadily.	Revolving arm damping is not sufficient.	Readjust the revolving arm damping per procedure defined in Section 4.1.2.
Spring arm is hard to move up and down, or is not able to be easily positioned.	The spring inside the arm needs adjustment.	Adjust the spring（professional staff）

⚠ **CAUTION: For any problem not listed in the above table, please contact Aeonmed Customer Service for further guidance.**

The model & parameter table for operating shadowless light

Model / Parameter	OL97 series LED Shadowless Surgical light
Fuse model& rated value	T4A H250V/T10A H250V

仅限于2017-ZHBJ-2056项目招投标使用

仅限于2017-ZHBJ-2056项目招投标使用
仅限于2017-ZHBJ-2056项目招投标使用
仅限于2017-ZHBJ-2056项目招投标使用

8 Specifications and Working Theory

8.1 Specifications

8.1.1 OL97 series LED Shadowless Surgical light Specification Table

The light power

Model	Power(VA)
OL9760	100
OL9760SD	160
OL9760HD	260
OL9760/60	200
OL9760/60SD	260
OL9760/60SD/HD	420
OL9760/60HD	360
OL9780	150
OL9780SD	210
OL9780HD	310
OL9780/60	250
OL9780/60SD	310
OL9780/60SD/HD	470
OL9780/60HD	410
OL9780/80	300
OL9780/80SD	360
OL9780/80SD/HD	520
OL9780/80HD	460

仅限于2017-ZHBJ-2056项目招投标使用
仅限于2017-ZHBJ-2056项目招投标使用
仅限于2017-ZHBJ-2056项目招投标使用

8.1.2 Environment Requirements

- Mains Voltage, Frequency： 100V/240V ~ , 60Hz/50Hz
- Operating Temperature: 10-30℃; 10%-80%;
- Atmospheric pressure: 860hPa ~ 1060hPa;
- Standard Installation height：3 meters
- The lighthead of OL97 series LED Shadowless Surgical light internally uses special low voltage LED’s biased to 24 VDC

CE

- Safety type of this equipment：Class Ⅰ equipment
- Working Mode: Continuous operation.
- This LED Shadowless Surgical light is classified as permanent installed equipment, not suitable for use with flammable anesthetics. Please refer to this operation manual for the methods of disinfection

⚠ **CAUTION:** **This equipment should be stored in a well ventilated room that is free from corrosive gases and high intensity magnetic fields.**

⚠ **CAUTION:** **If the transportation (storage) conditions exceed the specifications for Storage / Transportation environment as shown above, the state from Transport/ Storage to Use need the equipment to be placed in the operating environment for at least 8 hours.**

8.1.3 Technical Specifications of OL97 series LED Shadowless Surgical light

Technical data \ Model		OL9780/80 OL9780/80SD OL9780/80SD/HD OL9780/80HD	OL9780/60 OL9780/60SD OL9780/60SD/HD OL9780/60HD	OL9760/60 OL9760/60SD OL9760/60SD/HD OL9760/60HD	OL9780 OL9780SD OL9780HD	OL9760 OL9760SD OL9760HD
Central illuminance in concentrated beam (10K Lx) measured at 1 meter distance from the light emitting surface.		$16^{+0\%}_{-15\%}/16^{+0\%}_{-15\%}$	$16^{+0\%}_{-15\%}/16^{+0\%}_{-15\%}$	$16^{+0\%}_{-15\%}/16^{+0\%}_{-15\%}$	$16^{+0\%}_{-15\%}$	$16^{+0\%}_{-15\%}$
Color Temperature (K)		3000~5800	3000~5800	3000~5800	3000~5800	3000~5800
Color rendering Index Ra (%)		$98\%^{+0\%}_{-5\%}$	$98\%^{+0\%}_{-5\%}$	$98\%^{+0\%}_{-5\%}$	$98\%^{+0\%}_{-5\%}$	$98\%^{+0\%}_{-5\%}$
Color rendering Index R9 (%)		$98\%^{+0\%}_{-5\%}$	$98\%^{+0\%}_{-5\%}$	$98\%^{+0\%}_{-5\%}$	$98\%^{+0\%}_{-5\%}$	$98\%^{+0\%}_{-5\%}$
Diameter d10 (mm) (Min)		220mm±20%/ 220mm±20%	220mm±20%/ 180mm±20%	180mm±20%/ 180mm±20%	220mm±20%	180mm±20%
*Diameter d10 (mm) (Max)		360mm±20% 360mm±20%	360mm±20% 300mm±20%	300mm±20% 300mm±20%	360mm±20%	300mm±20%
*Diameter d50 (mm)		≥88/≥88	≥88/≥72	≥72/≥72	≥88	≥72
Shadow dilution (%)	At base of tube	85/85	85/85	85/85	85	85
	With one mask	50/50	50/40	40/40	50	40

仅用于2017-ZHBJ-2056项目招投标使用

	With one mask, at base of tube	40/40	40/40	40/40	40	40
	With two masks	40/40	40/40	40/40	40	40
	With two masks, at base of tube	35/35	35/35	55/35	35	35
**power of light （W）		96/96	96/48	48/48	96	48
Model of fuse and rating value		T10A H250V/ T4A H250V / T4A H250V	T10A H250V/ T4A H250V / T4A H250V	T10A H250V/ T4A H250V / T4A H250V	T10A H250V/ T4A H250V	T10A H250V/ T4A H250V
***Irradiance (W/m^2)		≤600/600	≤600/600	≤600/600	≤600	≤600
Illumination depth（mm）		450mm±20% 450mm±20%	450mm±20% 500mm±20%	500mm±20% 500mm±20%	450mm±20%	500mm±20%

* Diameter d10 (mm) (Min): measured data in the highest luminance intensify.
**Diameter d10 (mm) (Max): measured data in the luminance intensify less than 40 KLX
***Diameter d50 (mm): Diameter d50, which the edge luminance has reached 50% of the central luminance, should be not less than 50% of Diameter d10.

**** Service life of light: 50,000 hours for LEDs.

***** Avoid overlapping of the two lightheads, which may cause overheating in the surgical area.

仅限于2017-ZHBJ-2056项目招投标使用
仅限于2017-ZHBJ-2056项目招投标使用
仅限于2017-ZHBJ-2056项目招投标使用

8.1.4 Technical Specification for Video Camera for OL9700

Note: For additional specifications, reference Camera User Manual.

Video Camera	**Standard Definition (SD)**	**High Definition (HD)**
CCD Sensor	¼” CCD	1/3” CMOS
Signal System	NTSC or PAL	1080i
Effective number of pixels	440,000	2,000,000

Horizontal resolution (at center) (LVT) -Standard NTSC or PAL	600 TV-line	N/A
Aspect Ratio	4:3	16:9
S/N ratio (dB)	>50	>50
Optical zoom	43x motorized zoom	10x motorized zoom
Digital zoom	16x	12x
Focal length (mm/inch)	f = 3.21-138.5mm	f = 5.1mm-51.0 mm
Minimum working distance (mm/inch)	100mm	10 mm (wide) 800 mm (telephoto)
Aperture	F1.65 to F3.7	F1.8 to F2.1
Antiflicker	Integrated	Integrated
Autofocus	Integrated	Integrated
Sensitivity (lux)	1.4 (F1.6, 50IRE)	1.2 (F1.8, 50IRE)
Location of camera	Center of lighthead in post for disinfection handle	Center of lighthead in post for disinfection handle
Control box power supply	100-230 V ; 50/60 Hz ; 50 VA	100-230 V ; 50/60 Hz ; 50 VA
White balance	Auto	Auto
Video signal outputs	SD: 75 ohm/external BNC plug-composite HD: Component YPbPr	SD: Y/C 75 ohm/external BNC plug-composite
Serial link interface	RS-485	RS-485

仅限于2017-ZHBJ-2056项目招标文件使用
仅限于2017-ZHBJ-2056项目招标文件使用
仅限于2017-ZHBJ-2056项目招标文件使用

8.1.5 Technical Specification for Video Monitor for OL9700

Note: For additional specifications, reference Video Monitor User Manual.

Video Monitor	**Standard Definition (SD)**	**High Definition (HD)**
LCD Panel	TFT-LCD	TFT (LED backlight)
Viewing Aero(Diagonal)	19 inches	26 inches
Resolution (H×W)	1280×1024	1920×1080
Luminance	300 cd/m^2	400 cd/m^2
Contrast Ratio	1000:1	1000:1
Aspect Ratio	4:3	16:9
Viewing Angle	160°	178°
Response Time	5ms	8ms
Power Consumption	36 Watts	60 Watts
Video Input Formats	Comp, S-video, VGA	Comp, S-video, RGBS, YPbPr, DVI, SDI

8.1.6 OL97 series LED Shadowless Surgical light Packing List

	NO.1	NO.2	NO.3
OL9780/80	1. one 800mm diameter lighthead; 2. one disinfection handle；	1. one 800mm diameter lighthead; 2. one disinfection handle;	1. two spring arms; 2. one revolving arm; 3. one group of housing (two) 4. one housing loop; 5. one set of light base; 6. one group of clamp ring (two); 7.six self-tapping screws ST4.2×16; 8. twelve M12 screw nuts; 9. one T10A H250V fuse and one T4A H250V fuse; 10. one product manual.

仅限于2017-ZHBJ-2056项目招投标使用

OL9780/80SD	1. one 800mm diameter lighthead; 2. one disinfection handle; 3. one camera disinfection handle; 4. one SD video camera 5.one video monitor	1. one 800mm diameter lighthead; 2. one disinfection handle;	1.three spring arms; 2. two revolving arm; 3. one group of housing (two) 4. one housing loop; 5. one set of light base; 6. one group of clamp ring (two); 7.six self-tapping screws ST4.2×16; 8. twelve M12 screw nuts; 9. one T10A H250V fuse and one T4A H250V fuse; 10. one product manual.
OL9780/80SD/HD	1. one 800mm diameter lighthead; 2. one disinfection handle; 3. one camera disinfection handle; 4. one HD video camera 5.one video monitor	1. one 800mm diameter lighthead; 2. one disinfection handle; 3. one camera disinfection handle; 4. one SD video camera 5.one video monitor	1. four spring arms; 2. three revolving arm; 3. one group of housing (two) 4. one housing loop; 5. one set of light base; 6. one group of clamp ring (two); 7.six self-tapping screws ST4.2×16; 8. twelve M12 screw nuts; 9. one T10A H250V fuse and one T4A H250V fuse; 10. one product manual.
OL9780/80HD	1. one 800mm diameter lighthead; 2. one disinfection handle; 3. one camera disinfection handle; 4. one HD video camera 5.one video monitor	1. one 800mm diameter lighthead; 2. one disinfection handle;	1.three spring arms; 2. two revolving arm; 3. one group of housing (two) 4. one housing loop; 5. one set of light base; 6. one group of clamp ring (two); 7.six self-tapping screws ST4.2×16; 8. twelve M12 screw nuts; 9. one T10A H250V fuse and one T4A H250V fuse; 10. one product manual.

仅限于2017-ZHBJ-2056项目招投标使用
仅限于2017-ZHBJ-2056项目招投标使用
仅限于2017-ZHBJ-2056项目招投标使用

OL9780/60	1. one 800mm diameter lighthead; 2. one disinfection handle；	1. one 600mm diameter lighthead; 2. one disinfection handle;	1. two spring arms; 2. one revolving arm; 3. one group of housing (two) 4. one housing loop; 5. one set of light base; 6. one group of clamp ring (two); 7.six self-tapping screws ST4.2×16; 8. twelve M12 screw nuts; 9.one T10A H250V fuse and one T4A H250V fuse; 10. one product manual.
OL9780/60SD	1. one 800mm diameter lighthead; 2. one disinfection handle; 3. one camera disinfection handle; 4. one SD video camera 5.one video monitor	1. one 600mm diameter lighthead; 2. one disinfection handle;	1. three spring arms; 2. two revolving arm; 3. one group of housing (two) 4. one housing loop; 5. one set of light base; 6. one group of clamp ring (two); 7.six self-tapping screws ST4.2×16; 8. twelve M12 screw nuts; 9. one T10A H250V fuse and one T4A H250V fuse; 10. one product manual.
OL9780/60SD/HD	1. one 800mm diameter lighthead; 2. one disinfection handle; 3. one camera disinfection handle; 4. one HD video camera 5.one video monitor	1. one 600mm diameter lighthead; 2. one disinfection handle; 3. one camera disinfection handle; 4. one SD video camera 5.one video monitor	1. four spring arms; 2. three revolving arm; 3. one group of housing (two) 4. one housing loop; 5. one set of light base; 6. one group of clamp ring (two); 7.six self-tapping screws ST4.2×16; 8. twelve M12 screw nuts; 9. one T10A H250V fuse and one T4A H250V fuse; 10. one product manual.

仅限于2017-ZHBJ-2056项目招投标使用
仅限于2017-ZHBJ-2056项目招投标使用
仅限于2017-ZHBJ-2056项目招投标使用

OL9780/60HD	1. one 800mm diameter lighthead; 2. one disinfection handle; 3. one camera disinfection handle; 4. one HD video camera 5.one video monitor	1. one 600mm diameter lighthead; 2. one disinfection handle;	1.three spring arms; 2. two revolving arm; 3. one group of housing (two) 4. one housing loop; 5. one set of light base; 6. one group of clamp ring (two); 7.six self-tapping screws ST4.2×16; 8. twelve M12 screw nuts; 9. one T10A H250V fuse and one T4A H250V fuse; 10. one product manual.
OL9760/60	1. one 600mm diameter lighthead; 2. one disinfection handle；	1. one 600mm diameter lighthead; 2. one disinfection handle;	1. two spring arms; 2. one revolving arm; 3. one group of housing (two) 4. one housing loop; 5. one set of light base; 6. one group of clight ring (two); 7.six self-tapping screws ST4.2×16; 8. twelve M12 screw nuts; 9. one T10A H250V fuse and one T4A H250V fuse; 10. one product manual.
OL9760/60SD	1. one 600mm diameter lighthead; 2. one disinfection handle; 3. one camera disinfection handle; 4. one SD video camera 5.one video monitor	1. one 600mm diameter lighthead; 2. one disinfection handle;	1.three spring arms; 2. two revolving arm; 3. one group of housing (two) 4. one housing loop; 5. one set of light base; 6. one group of clamp ring (two); 7.six self-tapping screws ST4.2×16; 8. twelve M12 screw nuts; 9. one T10A H250V fuse and one T4A H250V fuse; 10. one product manual.

仅限于2017-ZHBJ-2056项目招投标使用
仅限于2017-ZHBJ-2056项目招投标使用
仅限于2017-ZHBJ-2056项目招投标使用

OL9760/60SD/HD	1. one 600mm diameter lighthead; 2. one disinfection handle; 3. one camera disinfection handle; 4. one HD video camera 5.one video monitor	1. one 600mm diameter lighthead; 2. one disinfection handle; 3. one camera disinfection handle; 4. one SD video camera 5.one video monitor	1. four spring arms; 2. three revolving arm; 3. one group of housing (two) 4. one housing loop; 5. one set of light base; 6. one group of clamp ring (two); 7.six self-tapping screws ST4.2×16; 8. twelve M12 screw nuts; 9. one T10A H250V fuse and one T4A H250V fuse; 10. one product manual.
OL9760/60HD	1. one 600mm diameter lighthead; 2. one disinfection handle; 3. one camera disinfection handle; 4. one HD video camera 5.one video monitor	1. one 600mm diameter lighthead; 2. one disinfection handle;	1.three spring arms; 2. two revolving arm; 3. one group of housing (two) 4. one housing loop; 5. one set of light base; 6. one group of clamp ring (two); 7.six self-tapping screws ST4.2×16; 8. twelve M12 screw nuts; 9. one T10A H250V fuse and one T4A H250V fuse; 10. one product manual.
OL9780	1. one 800mm diameter lighthead; 2. one disinfection handle;	1.one spring arms; 2. one revolving arm; 3. one group of housing (two) 4. one housing loop; 5. one set of light base; 6. one group of clight ring (two); 7.six self-tapping screws ST4.2×16; 8. twelve M12 screw nuts; 9.one T10A H250V fuse and one T4A H250V fuse; 10. one product manual.	

仅限于2017-ZHBJ-2056项目招投标使用
仅限于2017-ZHBJ-2056项目招投标使用
仅限于2017-ZHBJ-2056项目招投标使用

OL9780SD	1. one 800mm diameter lighthead; 2. one disinfection handle; 3. one camera disinfection handle; 4. one SD video camera 5.one video monitor	1.two spring arms; 2. two revolving arm; 3. one group of housing (two) 4. one housing loop; 5. one set of light base; 6. one group of clamp ring (two); 7.six self-tapping screws ST4.2×16; 8. twelve M12 screw nuts; 9. one T10A H250V fuse and one T4A H250V fuse; 10. one product manual.	
OL9780HD	1. one 800mm diameter lighthead; 2. one disinfection handle; 3. one camera disinfection handle; 4. one HD video camera 5.one video monitor	1.two spring arms; 2. two revolving arm; 3. one group of housing (two) 4. one housing loop; 5. one set of light base; 6. one group of clamp ring (two); 7.six self-tapping screws ST4.2×16; 8. twelve M12 screw nuts; 9. one T10A H250V fuse and one T4A H250V fuse; 10. one product manual.	

仅限于2017-ZHBJ-2056项目招投标使用
仅限于2017-ZHBJ-2056项目招投标使用
仅限于2017-ZHBJ-2056项目招投标使用

OL9760	1. one 600mm diameter lighthead; 2. one disinfection handle；	1.one spring arms; 2. one revolving arm; 3. one group of housing (two) 4. one housing loop; 5. one set of light base; 6. one group of clight ring (two); 7.six self-tapping screws ST4.2×16; 8. twelve M12 screw nuts; 9. one T10A H250V fuse and one T4A H250V fuse; 19. one product manual.	
OL9760SD	1. one 600mm diameter lighthead; 2. one disinfection handle; 3. one camera disinfection handle; 4. one SD video camera 5.one video monitor	1.two spring arms; 2. two revolving arm; 3. one group of housing (two) 4. one housing loop; 5. one set of light base; 6. one group of clamp ring (two); 7.six self-tapping screws ST4.2×16; 8. twelve M12 screw nuts; 9. one T10A H250V fuse and one T4A H250V fuse; 10. one product manual.	

仅限于2017-ZHBJ-2056项目招投标使用
仅限于2017-ZHBJ-2056项目招投标使用
仅限于2017-ZHBJ-2056项目招投标使用

OL9760HD	1. one 600mm diameter lighthead; 2. one disinfection handle; 3. one camera disinfection handle; 4. one HD video camera 5.one video monitor	1.two spring arms; 2. two revolving arm; 3. one group of housing (two) 4. one housing loop; 5. one set of light base; 6. one group of clamp ring (two); 7.six self-tapping screws ST4.2×16; 8. twelve M12 screw nuts; 9. one T10A H250V fuse and one T4A1 H250V fuse; 10. one product manual.	

仅限于2017-ZHBJ-2056项目招投标使用
仅限于2017-ZHBJ-2056项目招投标使用
仅限于2017-ZHBJ-2056项目招投标使用

8.2 Working Theory

8.2.1 Functional Block Diagram of OL97 series LED Shadowless Surgical light

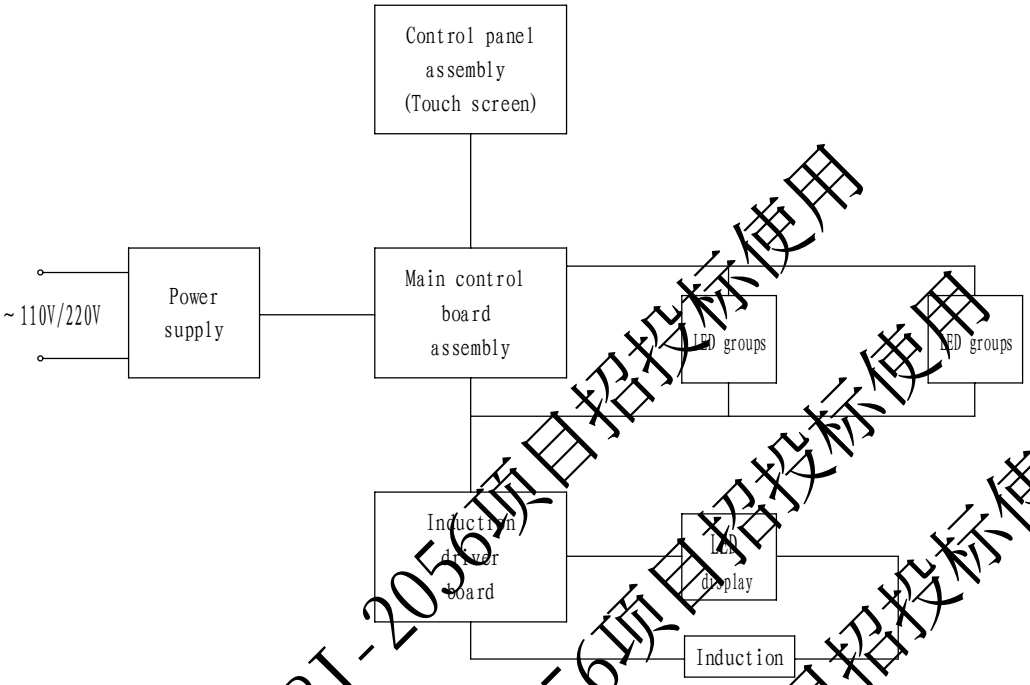

8.2.2 Design Principles of the LED Shadowless Surgical Light

The purpose of the LED Shadowless Surgical light Revolving Arm and Balance System is to provide optimal illumination for the requirements of different surgeries. The design principle of the revolving arm is that by using the movements of bearings, the LED Shadowless Surgical light is able to turn 360°and to be positioned in the required location. By adjusting the damping of the Revolving Arm, the LED Shadowless Surgical light is able to move freely and remain stable in the desired position. The design principle of the balance system is that a compression spring provides the force for balancing the lighthead via a four-link arrangement which allows the light head move up and down freely.

The installation of the OL97 series LED Shadowless Surgical light requires a ceiling height of three meters, because the lighthead needs about 1 meter for moving up and down. Movement of the light to the highest position is most applicable for chest, abdominal and neuro-surgery. When moved to the lowest position, it can be used as lateral lighting for the rectal and gynecologic surgery. The OL97 series LED Shadowless Surgical light has two lightheads; the main one is usually used as major illumination while the satellite one is usually used as ancillary illumination.

The light beam of this product is formed by the light emitting from the spot light source within this product which is reflected and focused by reflection cups.

Moreover, this product is able to adjust the intensity of illumination, faculae size, background light and shading compensation by touch screen and the other function buttons, to get a suitable lighting level and meet the demands of various surgeries.

仅限于2017-ZHBJ-2056项目招投标使用

8.2.3 Technical Characteristics of the LED Shadowless Surgical Light

Main features:

- The LED surgical optical system by CAD/CAM technology;
- LED, which has the advantage of low-energy consumption, environmental protection and long service life, is used to be the light source so that the radiation of infrared and ultraviolent is reduced.
- Streamlined outline structure;
- The flat lighting face of the LED Shadowless Surgical light is made from polycarbonate material via injection molding;
- Two control method: touch screen and induction area;
- The detachable handle cover can be high level disinfected with a solution of 75% alcohol, or by autoclaving (attention: the temperature shall not exceed 135℃. Do not place any object against the handle during the autoclave process);
- The LED Shadowless Surgical light is constructed of light weight materials and has a compact system for suspension and balancing which includes six groups of articulating elements. These parts can move simultaneously, so that it is very flexible to move and reliable to position. Hence it can meet the surgical requirement for height and angle of illumination.
- The top mounted (in the base block) power pack eliminates the problems for installation associated with mounting a control box on the wall.

仅限于2017-ZHBJ-2056项目招投标使用
仅限于2017-ZHBJ-2056项目招投标使用
仅限于2017-ZHBJ-2056项目招投标使用

9 Electromagnetic Compatibility

9.1 Electromagnetic Compatibility

Changing or reassembling this equipment without Aeonmed's authorization may cause electromagnetic compatibility problems. Please contact Aeonmed for assistance. The design and tests of OL97 series fully comply with the regulations of the electromagnetic compatibility.

⚠ **WARNING: Using cell phones or other radio transmitting equipment near this product may cause a malfunction. Closely monitor the working condition of this equipment if there is any radio transmission source nearby.**

Using other electrical equipment on top of this system or nearby may cause interference. Check if the equipment works normally in these conditions before using it on a patient.

Be careful of the following when the LED Shadowless Surgical light is connected:

Do not put any object which is not in accordance with EN 60601-1 within a 1.5m range of patients.

An isolation transformer must be used for the AC (alternating current) supply (in accordance with IEC60989), or additional protective ground wires must be connected if other devices (for medical or non-medical use) are connected to OL97 series LED Shadowless Surgical light by using a signal input/signal output cables.

A complete system current leakage test (according to EN 60601-1) must be performed after any equipment is connected to these outlets.

⚠ **WARNING: Medical electrical equipment operators should not contact non-medical electrical equipment and the patient(s) at same time, as this could be dangerous for patients or operators.**

9.1.1 Guidance and Manufacture's Declaration – Electromagnetic Emission

The OL97 series LED Shadowless Surgical light is intended for use in the electromagnetic environment specified below. The customer of the user of the OL97 series LED Shadowless Surgical light should assure that it is used in such and environment.

仅限于2017-ZHBJ-2056项目招投标使用

Emission test	Compliance	Electromagnetic environment - guidance
RF emissions CISPR 11	Group 1	The OL97 series LED Shadowless Surgical light uses RF energy only for its internal function. Therefore, its RF emissions are very low and are not likely to cause any interference in nearby electronic equipment.
RF emissions CISPR 11	Class A	The OL97 series LED surgical light is used only for hospital specific power supply network
Harmonic emissions IEC 61000-3-2	Not applicable	
Voltage fluctuations flicker emissions IEC 61000-3-3	Not applicable	

仅限于2017-ZHBJ-2056项目招投标使用
仅限于2017-ZHBJ-2056项目招投标使用
仅限于2017-ZHBJ-2056项目招投标使用

Immunity test	IEC 60601 test level	Compliance level	Electromagnetic environment guidance
Electrostatic discharge (ESD) IEC 61000-4-2	±6 kV contact ±8 kV air	±6 kV contact ±8 kV air	Floors should be wood, concrete or ceramic tile. If floor are covered with synthetic material, the relative humidity should be at least 30%.
Electrical fast transient/burst IEC 61000-4-4	±2 kV for power supply lines ±1 kV for input/output lines	±2 kV for power supply lines	Mains power quality should be that of a typical commercial or hospital environment.
Surge IEC 61000-4-5	±1 kV differential mode ±2 kV common mode	±1 kV differential mode ±2 kV common mode	Mains power quality should be that of a typical commercial or hospital environment.
Voltage dips, short interruptions and voltage variations on power supply input lines IEC 61000-4-11	<5% U_T for 0.5 cycle (>95% dip in U_T) 40% U_T for 5 cycles (60% dip in U_T) 70% U_T for 97 cycles (30% dip in U_T) <5% U_T for 5sec (>95% dip in U_T)	<5% U_T for 0.5 cycle (>95% dip in U_T) 40% U_T for 5 cycles (60% dip in U_T) 70% U_T for 97 cycles (30% dip in U_T) <5% U_T for 5sec (>95% dip in U_T)	Mains power quality should be that of a typical commercial or hospital environment. It is recommended that the OL97 series LED surgical light should be powered from an uninterruptible power supply or a battery.
Power frequency (50/60Hz) magnetic field IEC61000-4-8	3A/m	3A/m	Power frequency magnetic fields should be at levels characteristic of a typical location in a typical commercial or hospital environment.

NOTE: U_T is the ac mains voltage prior to application of the test level.

仅限于2017-ZHBJ-2056项目招投标使用

Immunity test	IEC 60601 test level	Compliance level	Electromagnetic environment - guidance
			Portable and mobile RF communications equipment should be used no closer to any part of the OL97 series operating table including cables, than the recommended separation distance calculated from the equation applicable to the frequency of the transmitter.
Grounded RF IEC 61000-4-6	3 V_{rms} 150 kHz to 80 MHz out of ISM band	3 V_{rms}	**Recommended separation distance** $d = \left[\frac{3.5}{V_1}\right]\sqrt{P}$
Radiated RF IEC 61000-4-3	3 V/m 80 MHz to 2.5 GHz	3 V/m	$d = \left[\frac{3.5}{E_1}\right]\sqrt{P}$ 80 MHz to 800 MHz $d = \left[\frac{7}{E_1}\right]\sqrt{P}$ 800 MHz to 2.5 GHz According to the transmitter manufacturer, *P* is the maximum output power rating of the transmitter in watts (W) and *d* is the recommended separation distance in meters (m). Field strengths from fixed RF transmitters, as determined by an electromagnetic site survey, should be less than the compliance level in each frequency range. Interference may occur in the vicinity of equipment marked with the following symbol:

NOTE 1 At 80 MHz and 800 MHz, the higher frequency range applies.

NOTE 2 These guidelines may not apply in all situations. Electromagnetic propagation is affected by absorption and reflection from structures, objects and people.

a Field strengths from fixed transmitters, such as base stations for radio (cellular/cordless) telephones and land mobile radios, amateur radio, AM and FM radio broadcast and TV broadcast cannot be predicted theoretically with accuracy. To assess the electromagnetic environment due to fixed RF transmitters, an electromagnetic site survey should be considered. If the measured field strength in the location in which the system is used exceeds the applicable RF compliance level above, the system should be observed to verify normal operation. If abnormal performance is observed, additional measures may be necessary, such as re-orienting or relocating the system.

b Over the frequency range from 150 kHz to 80 MHz, field strengths should be less than 10 V/m.

仅限于2017-ZHBJ-2056项目招投标使用

9.1.2 Recommended Separation Distances

Recommended separation distances between portable and mobile RF communications equipment and the OL97 series LED Shadowless Surgical light			
The OL97 series LED surgical light is intended for use in an electromagnetic environment in which radiated RF disturbances are controlled. The customer or the user of the OL97 series LED surgical light can help prevent electromagnetic interference by maintaining a minimum distance between portable and mobile RF communications equipment (transmitters) and the OL97 series LED surgical light as recommended below, according to the maximum output power of the communications equipment.			
Rated maximum output power of transmitter (W)	**Separation distance according to frequency of transmitter (m)**		
	150 kHz to 80 MHz outside ISM bands $d = \left[\frac{3.5}{V_1}\right]\sqrt{P}$	**80M to 800MHz** $d = \left[\frac{3.5}{E_1}\right]\sqrt{P}$	**800MHz to 2.5 GHz** $d = \left[\frac{7}{E_1}\right]\sqrt{P}$
0.01	0.12	0.04	0.07
0.1	0.37	0.11	0.22
1	1.17	0.35	0.70
10	3.69	1.11	2.21
100	11.67	3.50	7.00
For transmitters rated at a maximum output power not listed above, the recommended separation distance d in meters (m) can be estimated using the equation applicable to the frequency of the transmitter, where P is the maximum output power rating of the transmitter in watts (W) according to the transmitter manufacturer. NOTE 1 At 80 MHz and 800 MHz, the separation distance for the higher frequency range applies. NOTE 2 These guidelines may not apply in all situations. Electromagnetic propagation is affected by absorption and reflection from structures, objects and people.			

仅限于2017-ZHBJ-2056项目招投标使用

仅限于2017-ZHBJ-2056项目招投标使用
仅限于2017-ZHBJ-2056项目招投标使用
仅限于2017-ZHBJ-2056项目招投标使用

仅限于2017-ZHBJ-2056项目招投标使用
仅限于2017-ZHBJ-2056项目招投标使用
仅限于2017-ZHBJ-2056项目招投标使用

OL97 series LED Shadowless Surgical light

User Manual

V0.00

Aug. 2014

Beijing AEONMED Co.,Ltd.